DocuSign Envelope ID: 8C85636E-2812-47E8-BB76-AD8B71532974

NOTES :

FOR BERM WIDTH DIMENSIONS, SEE GENERAL DRAWING.

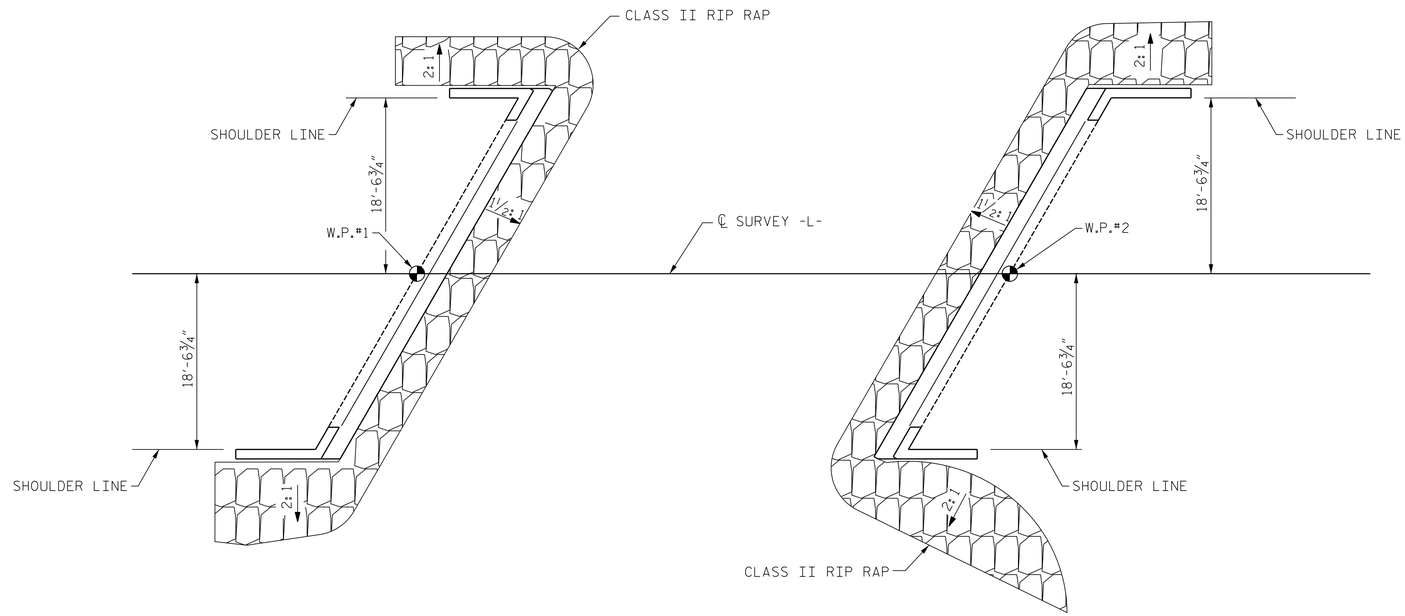

END BENT #1

END BENT #2

PLAN

ESTIMATED QUANTITIES		
BRIDGE @ STA. 13+25.02 -L-	RIP RAP CLASS II (2'-0" THICK)	GEOTEXTILE FOR DRAINAGE
	TONS	SQUARE YARDS
END BENT 1	61	46
END BENT 2	65	53

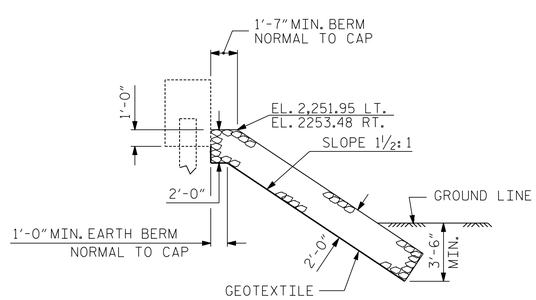

℄ SECTION

BERM RIP RAPPED

END BENT NO. 1

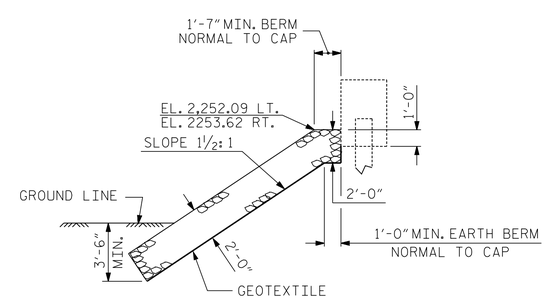

℄ SECTION

BERM RIP RAPPED

END BENT NO. 2

V&M
Vaughn & Melton
Consulting Engineers
Asheville, North Carolina
828-253-2796
Boone, NC 828-355-9933
Tri-Cities, TN 423-467-8401
Knoxville, TN 865-546-5800
Spartanburg, SC 864-574-4775
Charleston, SC 843-974-5650
Middlesboro, KY 606-248-6600
Atlanta, GA 770-627-3509
Raleigh, NC 919-977-9455
Charlotte, NC 704-357-0488
Copyright © 2006 Vaughn & Melton, Inc. All Rights Reserved

PROJECT NO. 14SP.20561.1

MACON COUNTY

STATION: 13+25.02 -L-

NORTH CAROLINA PROFESSIONAL SEAL 20711 ENGINEER HARDY L. WILLIS

12/9/2021

DOCUMENT NOT CONSIDERED FINAL UNLESS ALL SIGNATURES COMPLETED

STATE OF NORTH CAROLINA
DEPARTMENT OF TRANSPORTATION
RALEIGH

STANDARD

RIP RAP DETAILS

REVISIONS						
NO.	BY:	DATE:	NO.	BY:	DATE:	
1			3			
2			4			

SHEET NO. S-12

TOTAL SHEETS 13

ENGINEER OF RECORD : JEB
ASSEMBLED BY : MAF DATE : 7/16
CHECKED BY : HLW DATE : 7/16

DRAWN BY : REK 1/84
CHECKED BY : RDU 1/84

REV. 10/1/11 MAA/GM
REV. 12/21/11 MAA/GM
REV. 12/17 MAA/THC

STD. NO. RR1 (Sht 3)