DocuSign Envelope ID: 8C85636E-2812-47E8-BB76-AD8B71532974

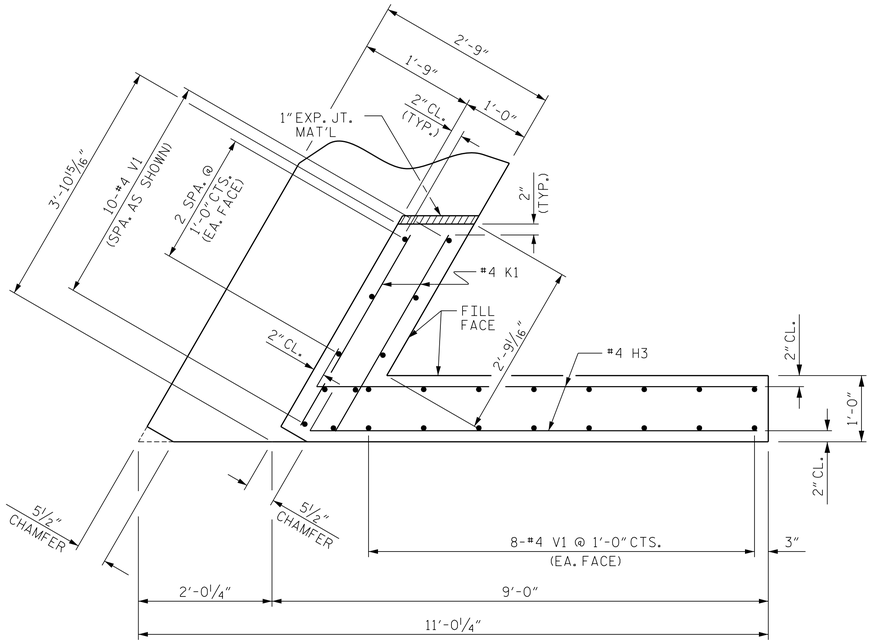

PLAN OF WING (W1)

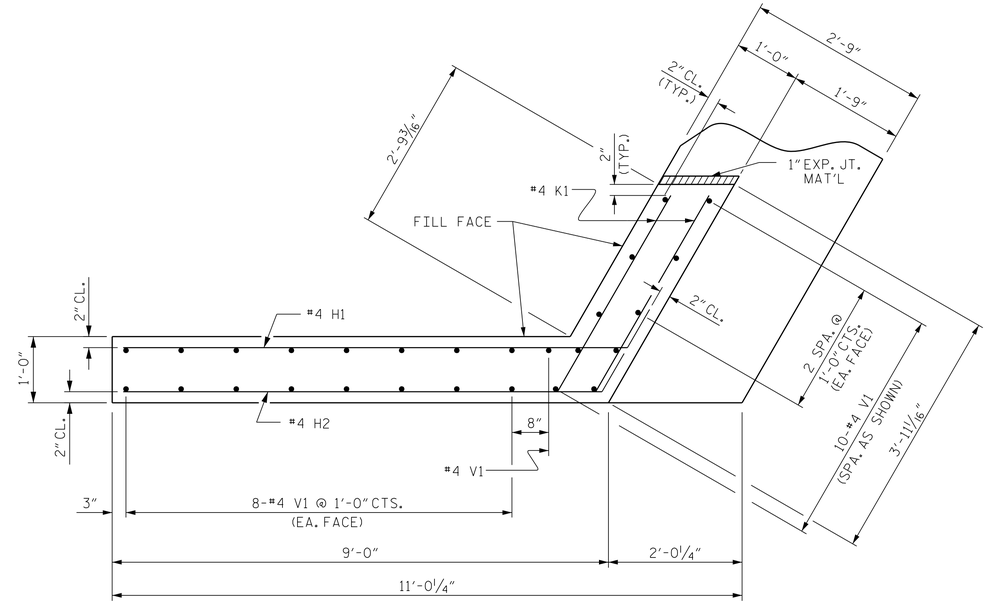

PLAN OF WING (W2)

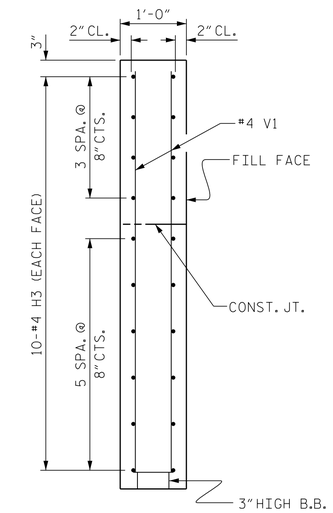

SECTION X-X

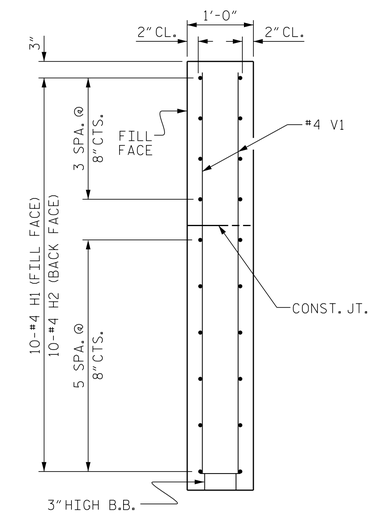

SECTION Y-Y

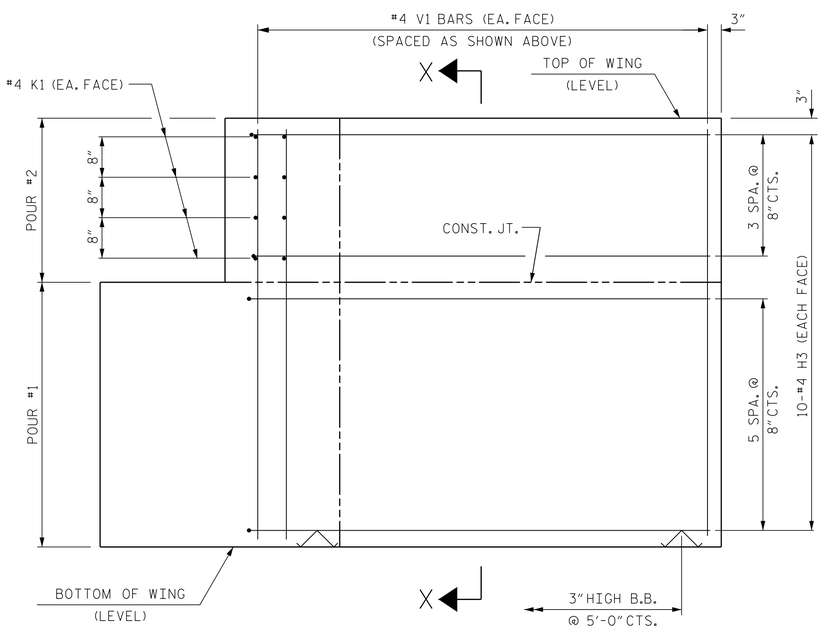

ELEVATION OF WING (W1)

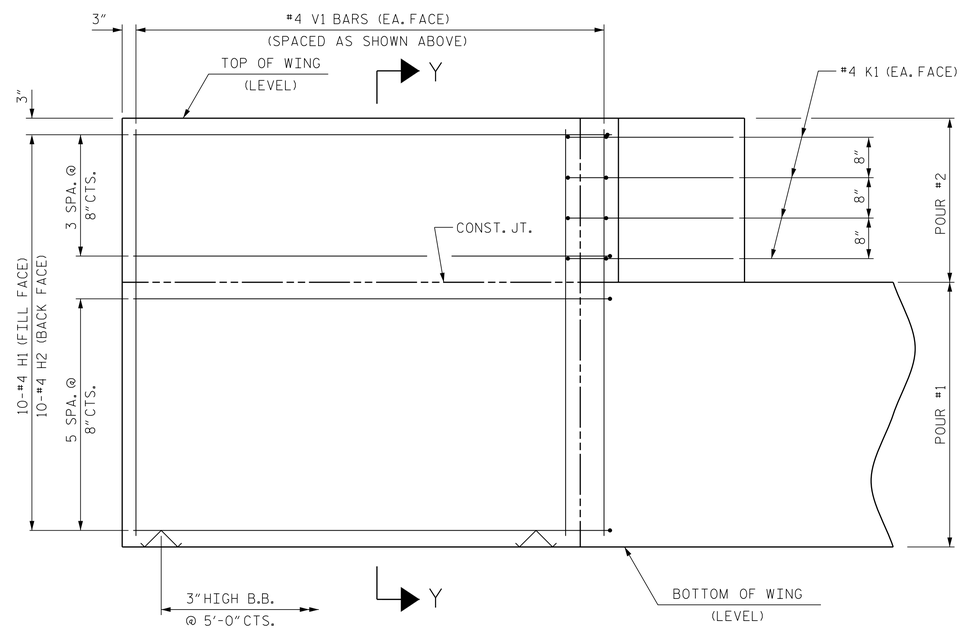

ELEVATION OF WING (W2)

WING DETAILS

ENGINEER OF RECORD : JEB			
ASSEMBLED BY : MAF	DATE : 7/16		
CHECKED BY : HLW	DATE : 7/16		
DRAWN BY : WJH 12/11	REV. 4/15	MAA/TMG	
CHECKED BY : AAC 12/11			

DOCUMENT NOT CONSIDERED FINAL UNLESS ALL SIGNATURES COMPLETED

NORTH CAROLINA PROFESSIONAL SEAL 20177 ENGINEER SANDY L. WILLIS
DocuSigned by: Sandy L. Willis
12/9/2021

PROJECT NO. 14SP.20561.1
MACON COUNTY
STATION: 13+25.02 -L-

SHEET 3 OF 4

STATE OF NORTH CAROLINA
DEPARTMENT OF TRANSPORTATION
RALEIGH

SUBSTRUCTURE
END BENT
WING DETAILS

REVISIONS						SHEET NO.
NO.	BY:	DATE:	NO.	BY:	DATE:	S-10
1			3			TOTAL SHEETS
2			4			13

STD. NO. EB_33_120S4