DocuSign Envelope ID: 8C85636E-2812-47E8-BB76-AD8B71532974

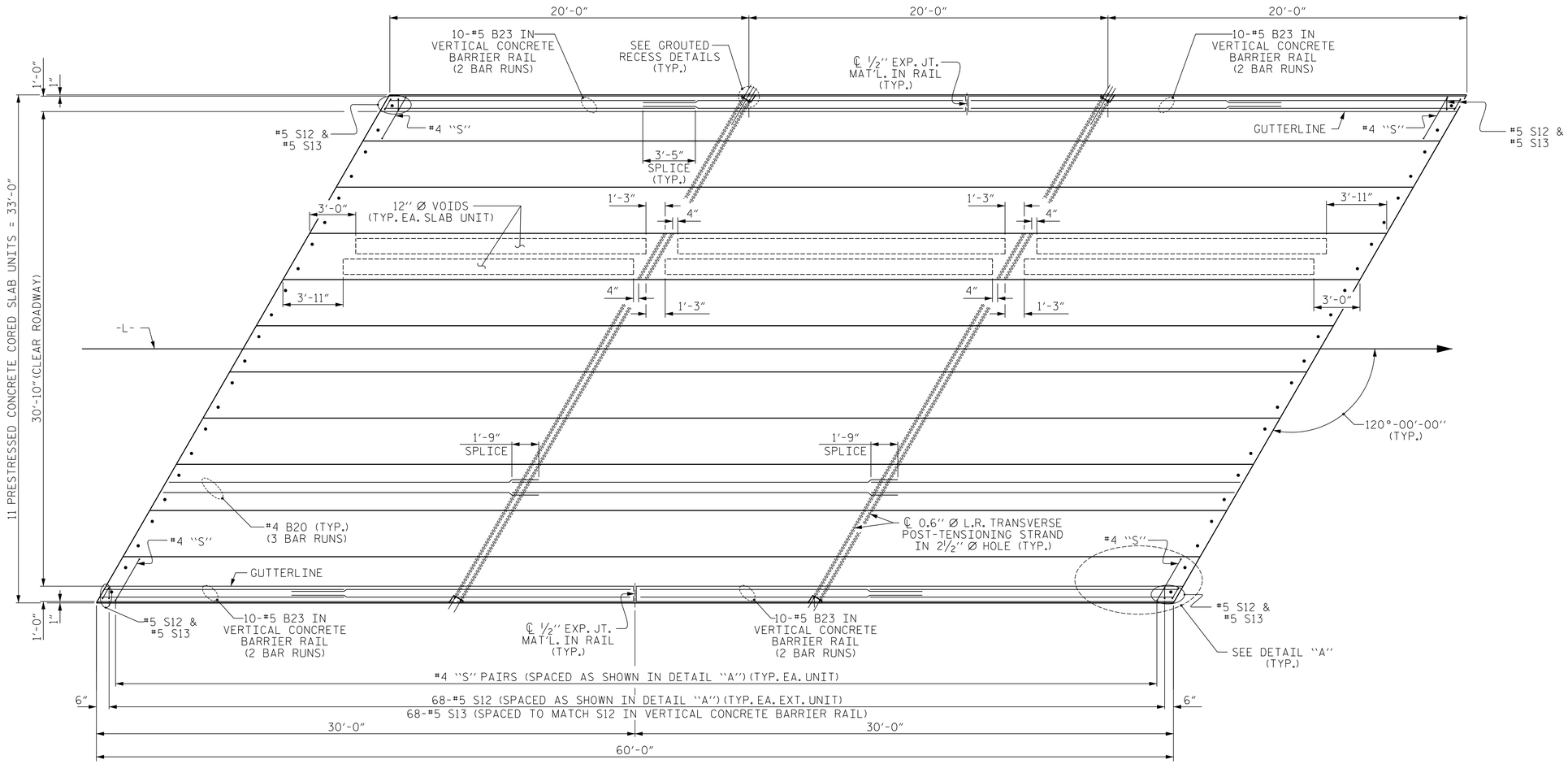

PLAN OF UNIT

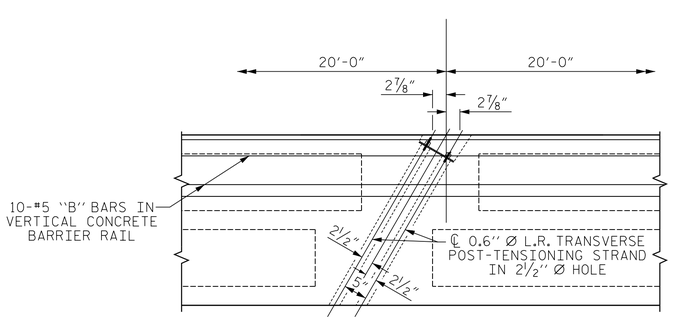

DETAIL "B"

#4 S11 BARS MAY BE SHIFTED AS NECESSARY TO MAINTAIN 1" CLEAR TO GROUTED RECESS AND 2 1/2" Ø TRANSVERSE POST-TENSIONING STRAND HOLES

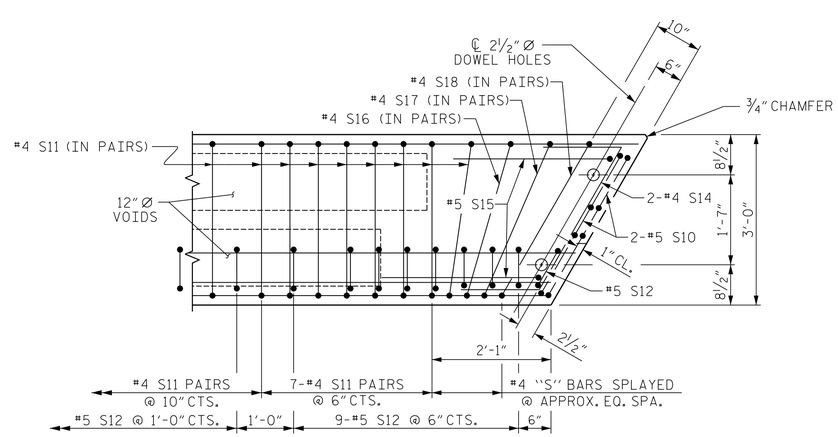

DETAIL "A"

(SIMILAR EACH END OF UNIT)
NOTE: EXTERIOR UNIT SHOWN - INTERIOR UNIT SIMILAR EXCEPT OMIT #5 S12 BARS.

ENGINEER OF RECORD:	JEB		
ASSEMBLED BY :	MAF	DATE :	7/16
CHECKED BY :	HLW	DATE :	7/16
DRAWN BY : MAA	6/10	REV. 12/5/11	MAA/AAC
CHECKED BY : MKT	7/10	REV. 8/14	MAA/TMG

DOCUMENT NOT CONSIDERED FINAL UNLESS ALL SIGNATURES COMPLETED

NORTH CAROLINA PROFESSIONAL SEAL 20771 ENGINEER HARRY L. WILLIS
12/9/2021

PROJECT NO. 14SP.20561.1
MACON COUNTY
STATION: 13+25.02 -L-

SHEET 2 OF 3

STATE OF NORTH CAROLINA
DEPARTMENT OF TRANSPORTATION
RALEIGH

PLAN OF 60' UNIT 30'-10" CLEAR ROADWAY 120° SKEW

REVISIONS							SHEET NO.
NO.	BY:	DATE:	NO.	BY:	DATE:		S-5
1			3				TOTAL SHEETS
2			4				13

STD. NO. 24PCS_33_120S_60L